TrynEx International, LLC, 531 Ajax Drive, Madison Heights, MI 48071-2429 • www.snowexproducts.com

October 15, 2026
Lit. No. 52309, Rev. 06

SnowEx®

Automatixx®
ATTACHMENT SYSTEM

8600

SPEEDWING™ Snowplow

Blade Assembly 77740
Big Box Assembly 77840

Parts List

AUTHENTIC SnowEx® PARTS & ACCESSORIES

A DIVISION OF DOUGLAS DYNAMICS, LLC

TABLE OF CONTENTS

SPEEDWING™ BLADE ASSEMBLY 4

A-FRAME ASSEMBLY 8

HEADGEAR ASSEMBLY 10

HYDRAULIC AND ELECTRICAL COMPONENTS 12

- Hydraulic Unit 12
- Lift and Angle Rams 14
- Hoses and Fittings 14
- Electrical Components 15

VEHICLE-SIDE HARNESS DIAGRAM 16

HEADLAMPS 17

Blade Components

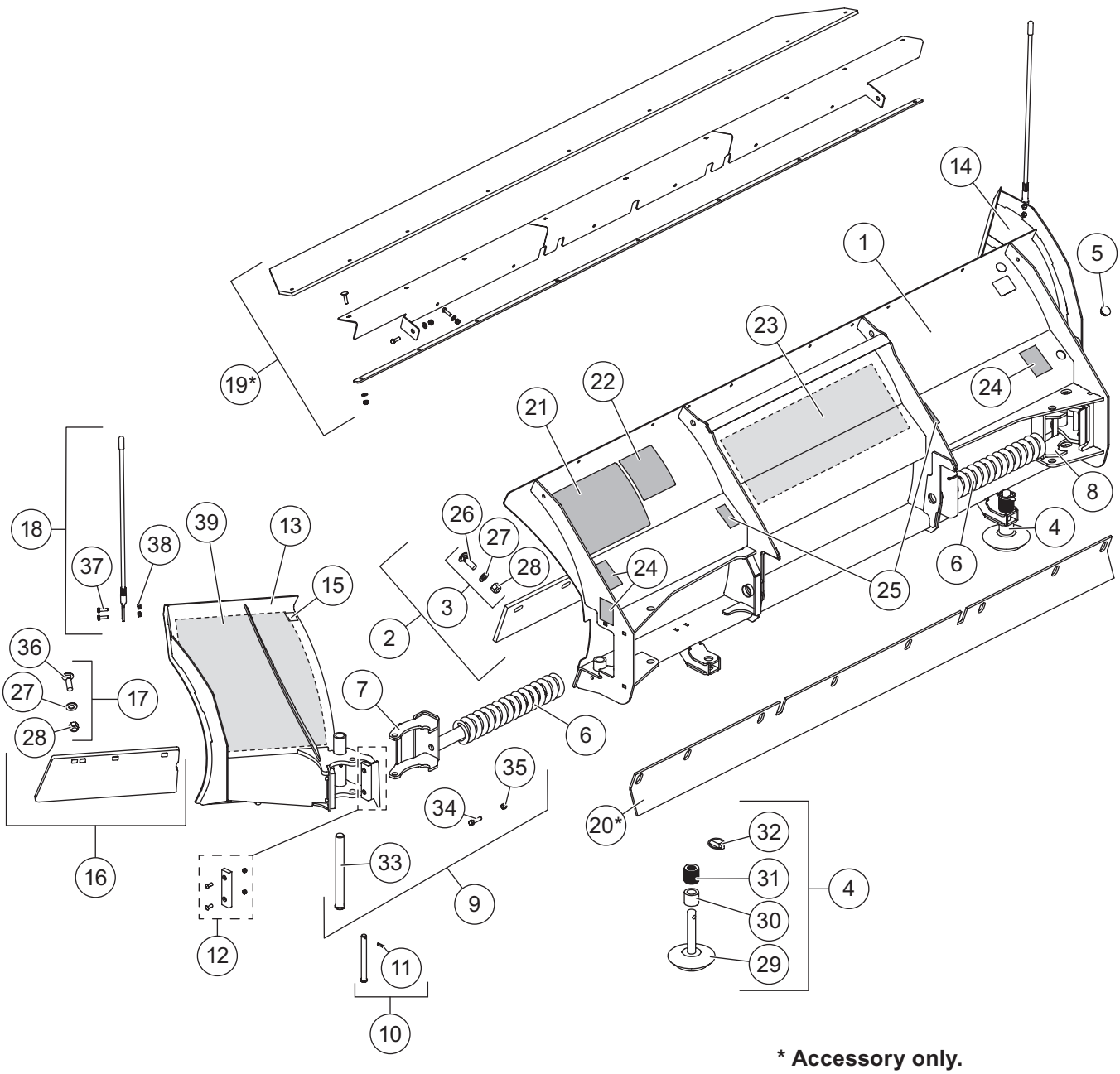

*** Accessory only.**

SPEEDWING™ BLADE ASSEMBLY

77740 Blade Components							
Item	**Part**	**Qty**	**Description**	**Item**	**Part**	**Qty**	**Description**
1	84559	1	Moldboard (w/labels)	16	42383	1	Wing Cutting Edge Kit (DS & PS)
2	84462	1	Moldboard Cutting Edge Kit	17	84684	1	Wing Cutting Edge Hardware Kit
3	41774	1	Bolt Bag – Moldboard Cutting Edge	18	84525	1	24" Blade Guides (set of 2)
4	53595	2	Plow Shoe Assembly	ns	84477*	1	36" Poly Blade Guides (set of 2)
5	B61614	2	Plug, Ø1.00 Finishing	19*	84518	1	Deflector Kit
6	42725	2	Compression Spring	20*	84461	1	Back Drag Edge
7	42392	1	Spring Guide – DS	21	52203	1	Label – Attach/Detach, Automatixx®
8	42393	1	Spring Guide – PS	22	59900	1	Label – Warning/Caution, Snowplows
9	42396	2	Hinge Pin Kit	23	77704	1	Label – Logo, Center Moldboard
10	42397	2	Spring Guide Pin Kit	24	32593EN	4	Label – Warning, Multiple Pinch Points
11	42943	2	1/4 x 1 Coiled Spring Pin	25	29256	2	Label – Warning, Crush Hazard
12	42395	4	Bumper Kit	ns	84643	1	Blade Label Kit, SPEEDWING™ (incl. items 21–25)
13	84652	1	Wing – DS				
14	84653	1	Wing – PS	ns	77728	1	Label Kit, SPEEDWING Wings (both)
15	43528	2	Wear Strip – Wing Top				
Item 2			**84462 Moldboard Cutting Edge Kit**				
		1	Cutting Edge 8600SW	3	41774	1	Bolt Bag – Moldboard Cutting Edge
Item 3			**41774 Bolt Bag – Moldboard Cutting Edge**				
26		8	5/8-11 x 2-1/2 Carriage Bolt G5	28		8	5/8-11 Hex Locknut GB
27		8	5/8 Hardened Flat Washer				
Item 4			**53595 Plow Shoe Assembly**				
29	53596	1	Disc Shoe	31	91192	34	Flat Washer, Special
30	60045	2	1-1/8 ID, 1-5/8 OD x 1-1/2 Spacer	32		2	7/16 x 1-3/4 Linchpin
Item 9			**42396 Hinge Pin Kit**				
33	42727	1	1 x 10-1/4 Hinge Pin	35		2	3/8 -16 Hex Locknut GB
34		2	3/8-16 x 1-1/2 Hex Cap Screw G5				
Item 16			**42383 Wing Cutting Edge Kit (DS & PS)**				
		2	Cutting Edge – SW Wing	17	84684	1	Wing Cutting Edge Hardware Kit
Item 17			**84684 Wing Cutting Edge Hardware Kit**				
27		6	5/8 Hardened Flat Washer	36		6	5/8-11 x 2 Carriage Bolt G5
28		6	5/8-11 Hex Locknut GB				
Item 18			**84525 24" Blade Guide Assembly**				
37		4	5/16-18 x 1 Hex Cap Screw G5	38		4	5/16-18 Hex Locknut GB
84643 Blade Label Kit, SPEEDWING							
21	52203	1	Label – Attach/Detach, Automatixx®	24	29593	4	Label – Warning, Multiple Pinch Points
22	59900	1	Label – Warning/Caution, Snowplows	25	29256	2	Label – Warning, Crush Hazard
23	77704	1	Label – Logo, Center Moldboard				
77728 Label Kit, SPEEDWING Wings (both)							
39	77706	1	Label – SPEEDWING Blade, DS	ns	77707	1	Label – SPEEDWING Blade, PS
ns = not shown							G = Grade

* Accessory only.

Blade Components

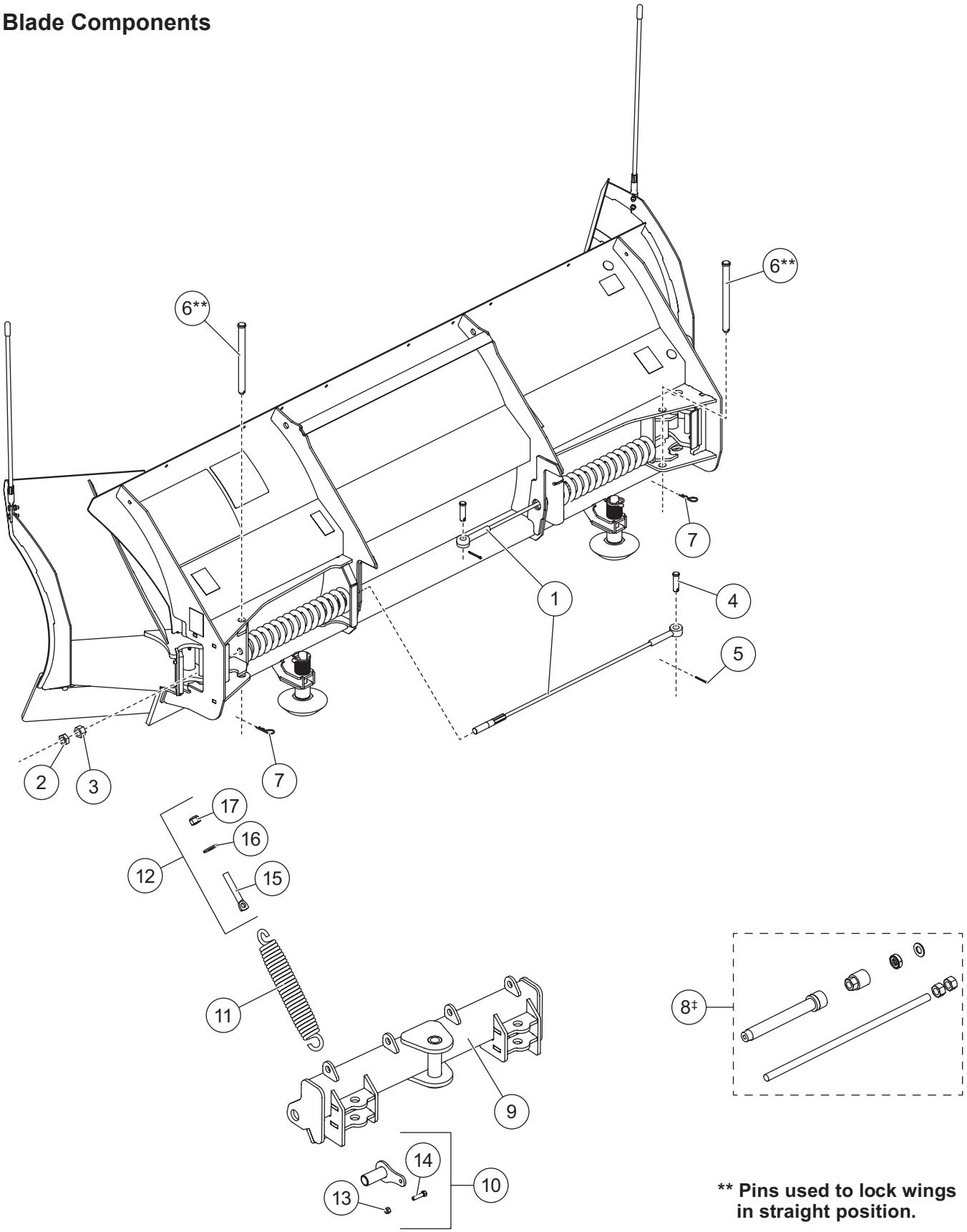

**** Pins used to lock wings in straight position.**

Blade Components – SPEEDWING							
Item	**Part**	**Qty**	**Description**	**Item**	**Part**	**Qty**	**Description**
1	42389	2	Cable Assembly w/Hardware (incl. items 2–5)	7	91962	2	1/8 Hairpin Cotter
				8‡	69780	–	Wing Spring Removal Tool
2	B61615	2	3/4-10 Hex Jam Nut	9	84577	1	Quadrant – SW
3	B61343	2	3/4-10 Hex Nut	10	42388	2	Pivot Bushing Kit
4	B61563	2	0.625 x 2.33 Clevis Pin	11	23039	4	Trip Spring
5	90601	2	1/4 x 1-1/2 Cotter Pin	12	83990	4	Trip Spring Eyebolt Kit
6	42738	2	3/4 x 9 Clevis Pin				
Item 10			**42388 Pivot Bushing Kit**				
		1	Blade Pivot Pin	14		1	3/8-16 x 1-1/2 Hex Cap Screw G5
13		1	3/8-16 Hex Locknut GB				
Item 12			**83990 Trip Spring Eyebolt Kit**				
15		4	5/8-11 x 4 Eyebolt G2	17		4	5/8-11 Hex Locknut GB
16		4	5/8 Hardened Flat Washer				
G = Grade							

‡ Service tool.

A-Frame Components

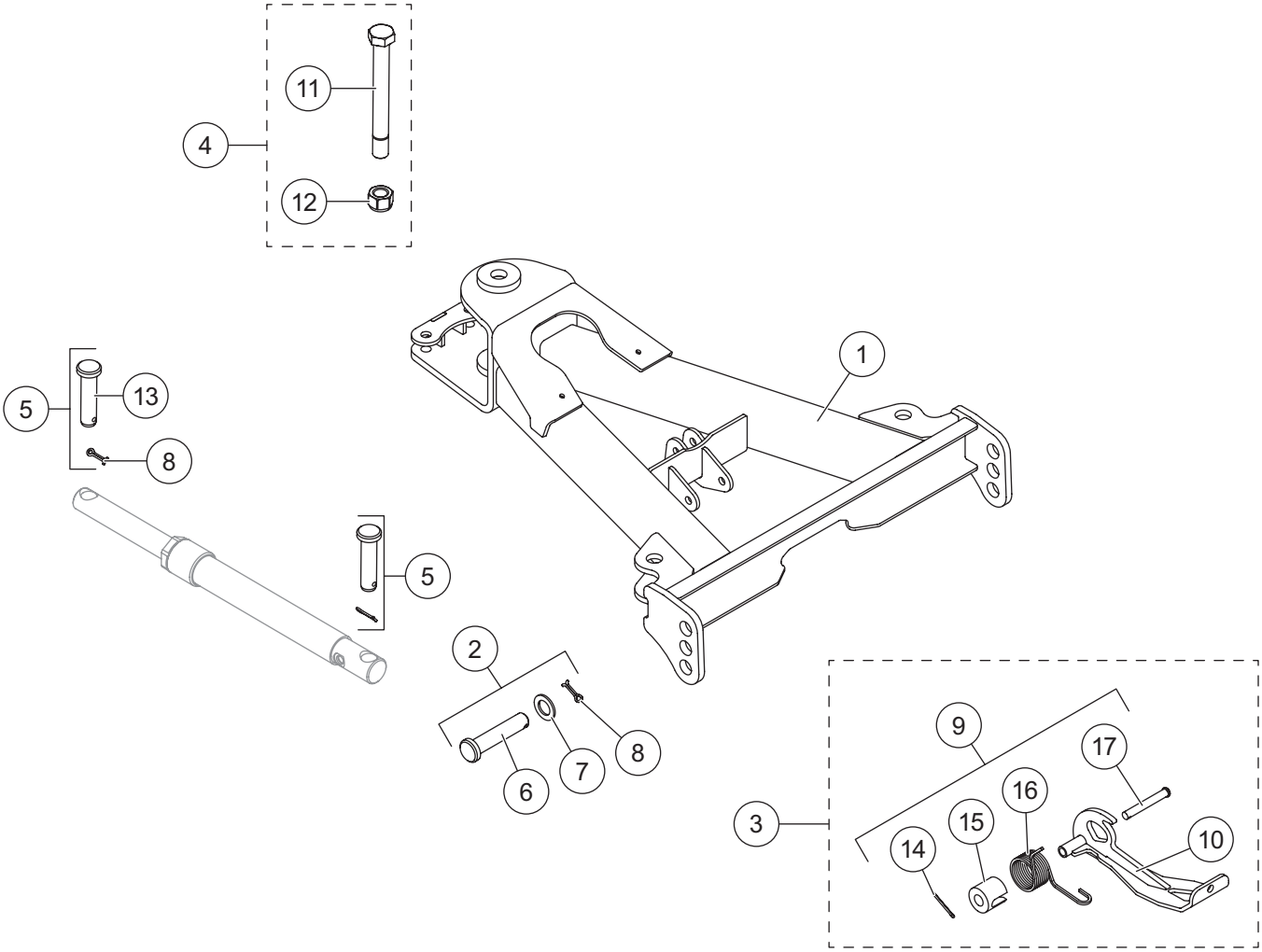

A-FRAME ASSEMBLY

A-Frame Components							
Item	**Part**	**Qty**	**Description**	**Item**	**Part**	**Qty**	**Description**
1	84590	1	A-Frame – SW	4	49768	1	Pivot Bolt Kit
2	84623	2	A-Frame Pin Kit	5	57968	4	1 x 4 Clevis Pin Kit
3	84593	1	Stand Kit				
Item 2			**84623 A-Frame Pin Kit**				
6		1	1 x 4-3/4 Clevis Pin	8		1	1/4 x 1-1/2 Cotter Pin
7		1	1" Flat Washer Special				
Item 3			**84593 Stand Kit**				
9	84615	1	Stand Hardware Kit	10		1	Stand
Item 4			**49768 Pivot Bolt Kit**				
11		1	1-8 x 9 Hex Cap Screw Special G5	12		1	1-8 Hex Locknut GB
Item 5			**57968 1 x 4 Clevis Pin Kit**				
8		1	1/4 x 1-1/2 Cotter Pin	13		1	1 x 4 Clevis Pin
Item 9			**84615 Stand Hardware Kit**				
14		1	5/32 x 1-1/2 Cotter Pin	16		1	Stand Torsion Spring
15		1	Stand Spring Spacer	17		1	1/2 x 3-11/16 Clevis Pin
G = Grade							

Headgear Components

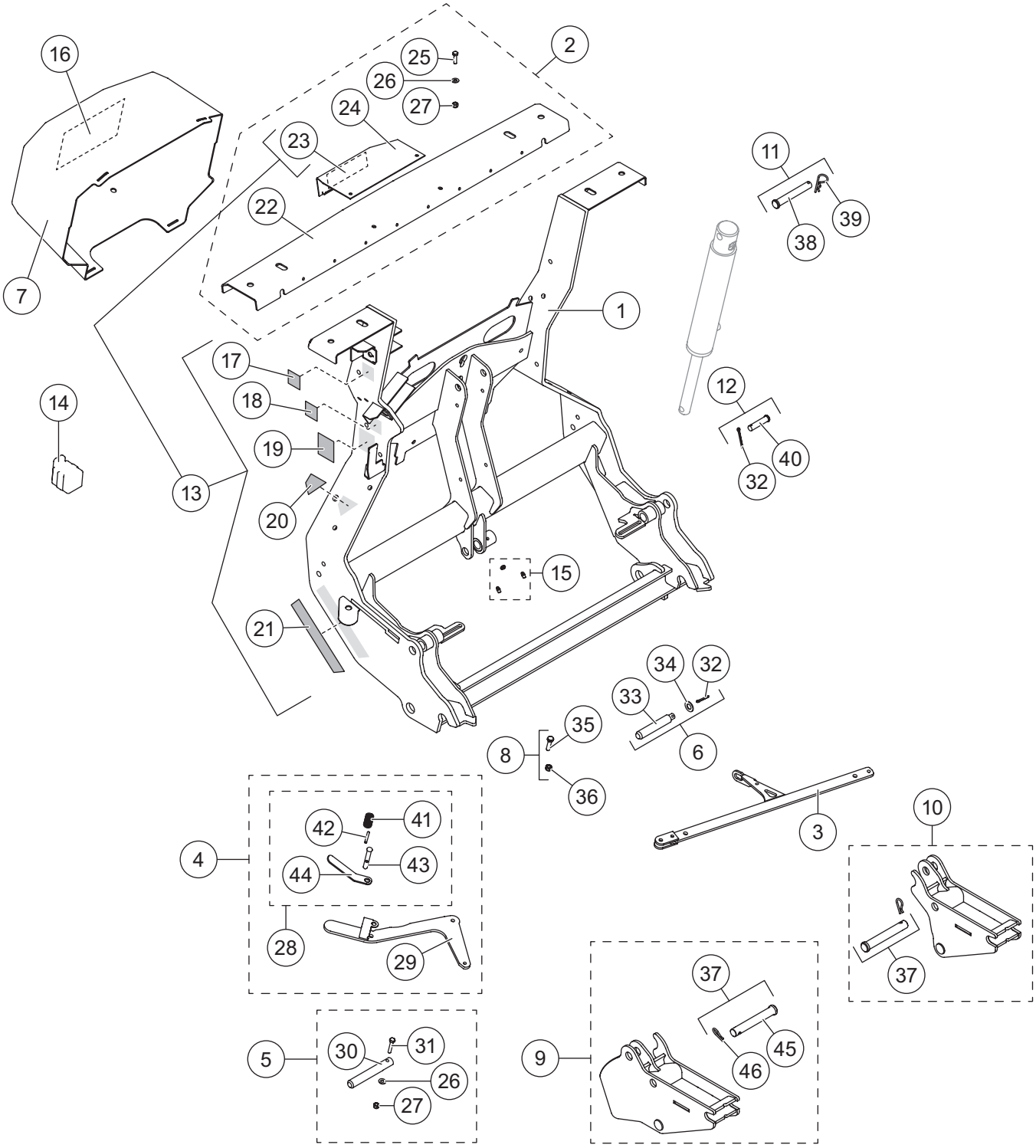

HEADGEAR ASSEMBLY

Headgear Components							
Item	**Part**	**Qty**	**Description**	**Item**	**Part**	**Qty**	**Description**
1	84622	1	Headgear (incl. item 15)	11	84632	1	Lift Ram Base Pin Kit
2	84624	1	Light Bar Channel	12	84627	1	Lift Ram Rod Pin Kit
3	84599	1	Link Arm	13	84647	1	Headgear Label Kit
4	84595	1	Attach Handle Kit	14	61246	1	Cable Boot
5	84603	2	Attach Pin Kit	15	84616	1	Grease Zerk (pkg of 3)
6	84601	1	Link Arm Jack Stand Pin Kit	16	43861	1	Label – Hydraulic Info, SPEEDWING™
7	84650	1	Hydraulic Cover – SW (incl. item 16)	17	52206	1	Label – Power Switch, Automatixx®
8	84635	1	Link Arm/Attach Handle Fastener Kit	18	52207	1	Label – Operation Switch, Automatixx
9	84608	1	Receiver Kit – DS (incl. item 44)	19	69689	1	Label – Logo, SECURITY GUARD™
ns	85121*	1	Receiver Kit, Tall – DS	20	77717	1	Label – Logo, Automatixx (upper)
10	84609	1	Receiver Kit – PS (incl. item 44)	21	77719	1	Label – Logo, Automatixx (lower)
ns	85122*	1	Receiver Kit, Tall – PS				
Item 2			**84624 Light Bar Channel**				
22		1	Light Bar	25		2	1/4-20 x 1 Hex Cap Screw G5
23	77727	1	Label – Logo, SnowEx® Light Bar Ctr	26		2	1/4 Flat Washer
24		1	Light Bar Top Plate, Center	27		2	1/4-20 Hex Locknut GB
Item 4			**84595 Attach Handle Kit**				
28	84596	1	Attach Handle Release Cam Kit	29	84779	1	Handle
Item 5			**84603 Attach Pin Kit**				
26		1	1/4 Flat Washer	30		1	Hitch Pin
27		1	1/4-20 Hex Locknut GB	31		1	1/4-20 x 1-1/2 Hex Cap Screw SS
Item 6			**84601 Link Arm Jack Stand Pin Kit**				
32		1	5/32 x 1-1/2 Cotter Pin	34		1	1/2 Flat Washer Type B Narrow SS
33		1	Stand Actuator Pin				
Item 8			**84635 Link Arm/Attach Handle Fastener Kit**				
35		1	5/16-18 x 1-1/4 Hex Cap Screw G5	36		1	5/16-18 Hex Locknut GB
Item 9			**84608 Receiver Kit – DS**				
		1	Receiver – DS	37	84611	1	Receiver Pin Kit
Item 10			**84609 Receiver Kit – PS**				
		1	Receiver – PS	37	84611	1	Receiver Pin Kit
Item 11			**84632 Lift Ram Base Pin Kit**				
38		1	5/8 x 4-1/4 Clevis Pin	39		1	1/8 Hairpin Cotter
Item 12			**84627 Lift Ram Rod Pin Kit**				
32		1	5/32 x 1-1/2 Cotter Pin	40		1	1/2 x 2-1/8 Clevis Pin HT
Item 13			**84647 Headgear Label Kit**				
17	52206	1	Label – Power Switch, Automatixx	20	77717	1	Label – Logo, Automatixx (upper)
18	52207	1	Label – Operation Switch, Automatixx	21	77719	1	Label – Logo, Automatixx (lower)
19	69689	1	Label – Logo, SECURITY GUARD	23	77727	1	Label – Logo, SnowEx Light Bar Ctr
Item 28			**84596 Attach Handle Release Cam Kit**				
41		1	Stand Lock Pin Spring	43		1	Handle Lock Pin
42		1	3/16 x 1-3/8 Roll Pin SS	44		1	Handle Lock Pin Lever
Item 37			**84611 Receiver Pin Kit**				
45	95739	1	3/4 x 5 Clevis Pin HT	46	42142	1	R-Pin Cotter
ns = not shown			SS = Stainless Steel	HT = Heat Treated			G = Grade

* Refer to the SPEEDWING snowplow Installation Instructions to confirm when tall receivers are required.

Hydraulic Unit Components

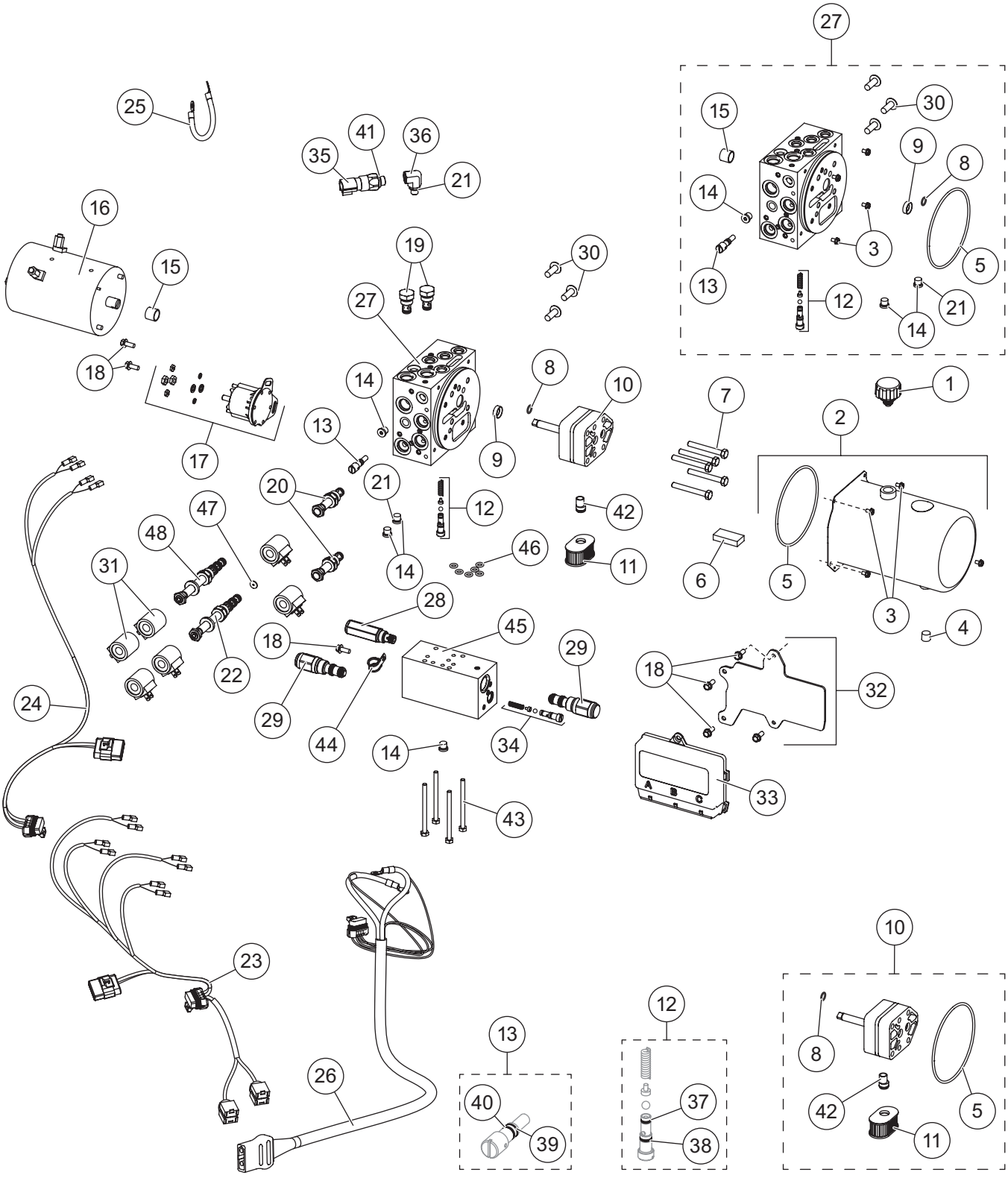

52648 Hydraulic Unit							
Item	**Part**	**Qty**	**Description**	**Item**	**Part**	**Qty**	**Description**
1	48278	1	Breather	25	29071	1	Vehicle Battery Cable 8"
2	52289	1	Reservoir Kit	26	52291	1	Snowplow Battery Cable
3	66607	4	#10-24 x 5/16 Machine Screw	27	52258	1	Manifold Assembly w/o Valves SW
4	92079	1	Plug, Square 3/8 NPTF	28	42889	1	Relief Valve 4000 psi
5	66519	1	O-Ring 2-250	29	42888	2	Counterbalance Valve 1400 psi
6	73897	1	Magnet	30	98043	3	3/8-16 x 1 Button Cap Screw
7	90073	5	5/16-18 x 2-1/4 Hex Cap Screw G5	31	52294	6	Coil
8	56274	1	O-Ring -013	32	52293	1	Plate, Module
9*	66515	1	Pump Shaft Seal	33	52292-2	1	Module, Plow Control
ns	52252	1	Seal Repair Tool Kit w/Seal	34	52284	1	Relief Valve (1 set)
10	52288	1	Hydraulic Pump Kit	35	52296	1	Pressure Switch
11	48281	1	Filter	36	52295	1	Elbow, 90° –4 M ORB/–6 F ORB
12	52282	1	Relief Valve (1 set)	37	55371	2	O-Ring -008
13	48517	1	Quill	38	25731	2	O-Ring -010
14	44344	4	Plug, Hex Socket –4 M ORB	39	48239	1	O-Ring -106
15†	56364	1	Bearing Sleeve	40	48240	1	Back-Up Ring -106
ns	52251	1	Bearing Repair Tool Kit w/Bearing	41	56569	1	O-Ring -906
16	52281	1	Motor	42	10887	1	Inlet Fitting
17	52290	1	Motor Relay Kit, FLEET FLEX System	43	90696	4	1/4-20 x 3-1/2 Hex Cap Screw G5
18	44355	7	1/4-20 x 5/8 Hex Washer-Head Thread-Rolling Screw	44	65340	1	Clamp Loop #10
				45	52262	1	Secondary Manifold Assembly w/o Valves (incl. items 16, 36, 48)
19	84934	2	Check Valve				
20	84936	2	Valve, 2-Way NC w/Rev Flow	46	43818	6	O-Ring -109
21	44343	5	O-Ring -904	47	52541	1	Orifice Disc 0.060
22	52285	1	Valve, 4-Way, 3-Position Closed Center	48	84937	1	Valve, 4-Way, 3-Position
23	52108	1	Plow Control Harness, 4-Coil	ns		3	Fuse, 5A Mini Automotive-Style (for items 25 and 26)
24	52077	1	Plow Control Harness, 2-Coil				
Item 2			**52289 Reservoir Kit**				
3	66607	4	#10-24 x 5/16 Machine Screw	5	66519	1	O-Ring 2-250
4	92079	1	Plug, Square 3/8 NPTF				
Item 12			**52282 Relief Valve**				
37	55371	1	O-Ring -008	38	25731	1	O-Ring -010
Item 13			**48517 Quill**				
39	48239	1	O-Ring -106	40	48240	1	Back-Up Ring -106
Item 27			**52258 Manifold Assembly w/o Valves SW**				
3	66607	4	#10-24 x 5/16 Machine Screw	14	44344	3	Plug, Hex Socket –4 M ORB
5	66519	1	O-Ring 2-250	15	56364	1	Bearing Sleeve
8	56274	1	O-Ring -013	21	44343	3	O-Ring -904
9	66515	1	Pump Shaft Seal	29	98043	3	3/8-16 x 1 Button Cap Screw
12	52282	1	Relief Valve (1 set)	46	43818	6	O-Ring -109
13	48517	1	Quill				
O-Ring Service Kits							
–	52298	–	O-Ring Kit	–	48310	–	Seal Kit, 2-Way Valves
–	48309	–	Seal Kit, 3-Way & 4-Way Valves	–	52303	–	Seal Kit, 3-Way Valves (for item 31)
ns = not shown			F = Female	M = Male			G = Grade

* Use 52252 tool to install.

† Use 52251 tool to install.

Go to *www.snowexproducts.com* for hydraulic unit service information and specifications.

Lift and Angle Ram Components

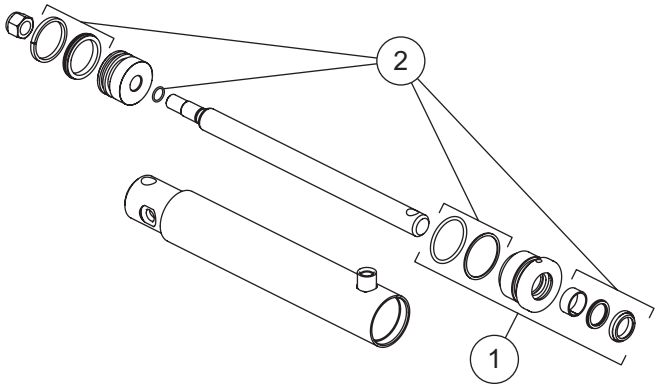

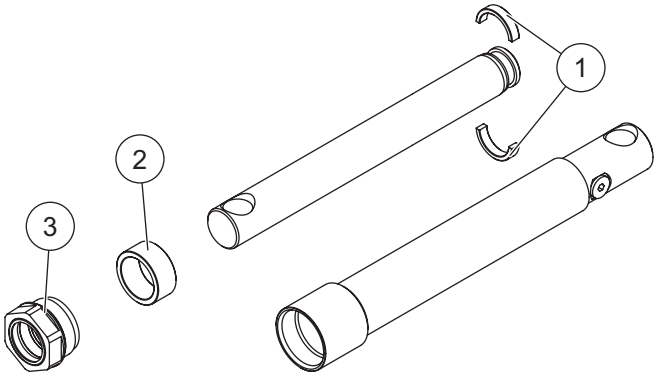

90910 Lift Ram Assembly 2 x 9-3/4 DA (Black) 84420* Lift Ram Assembly 2 x 9-3/4 DA (Red)			
Item	**Part**	**Qty**	**Description**
1	49499	1	1" Gland Assembly
2	48520	1	Seal Kit 2" DA Ram

* Discontinued

100259 Angle Ram Assembly 1-1/2 x 12 (Black) 84421* Angle Ram Assembly 1-1/2 x 12 (Red)			
Item	**Part**	**Qty**	**Description**
1	57879	1	Split Bearing Kit
2	56537	1	Spacer
3	48985	1	Gland Nut Assembly

* Discontinued

Hoses and Fittings

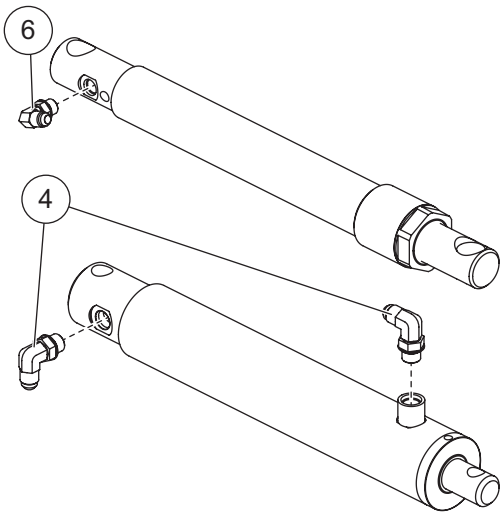

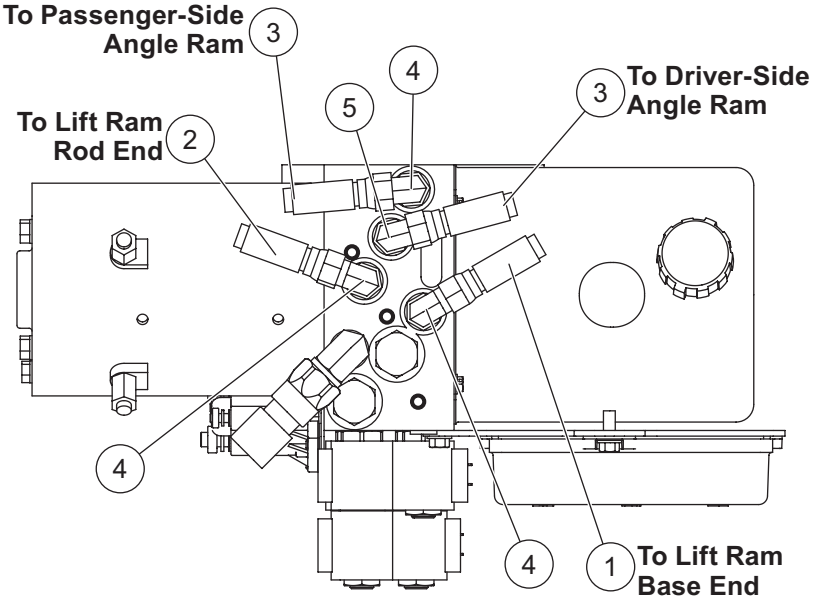

Hoses and Fittings							
Item	**Part**	**Qty**	**Description**	**Item**	**Part**	**Qty**	**Description**
1	84446	1	Hose, 1/4 x 14 w/F JIC Ends	5	40572	1	Elbow, Extra Long 90° –6 M JIC/–6 M ORB
2	40570	1	Hose, 1/4 x 22 w/F JIC Ends				
3	52304	2	Hose, 3/8 x 36 w/F JIC Ends	6	77929	1	Elbow, 90° –6 M JIC/–6 M ORB w/Screen
4	40571	7	Elbow, 90° –6 M JIC/–6 M ORB				
ns	56823	1	Hose Wrap				
F = Female			ns = not shown				M = Male

Electrical Components

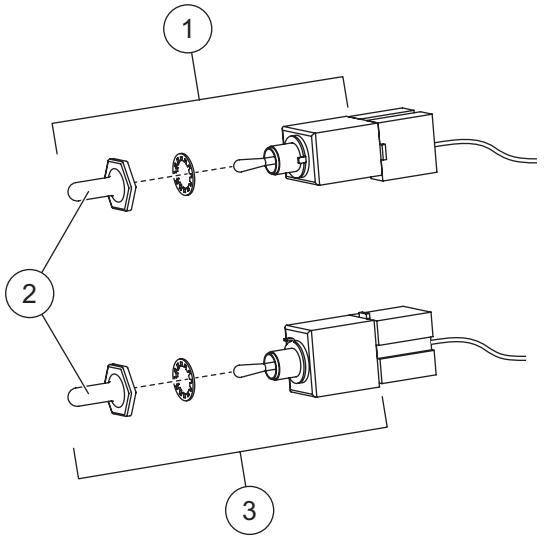

Plow-Side Electrical Components							
Item	**Part**	**Qty**	**Description**	**Item**	**Part**	**Qty**	**Description**
1	40575	1	Toggle Switch (MOM-ON, OFF, ON)	3	40576	1	Toggle Switch (MOM-ON, OFF, MOM-ON)
2	48259	2	Switch Boot				
Vehicle-Side Electrical Components							
*	42014	1	Vehicle Battery Cable	ns	48325	2	Plug Cover
*	28587	1	Vehicle Control Harness				
ns = not shown							

* For diagram see Vehicle-Side Harness Diagram.

Vehicle-Side Harness Diagram

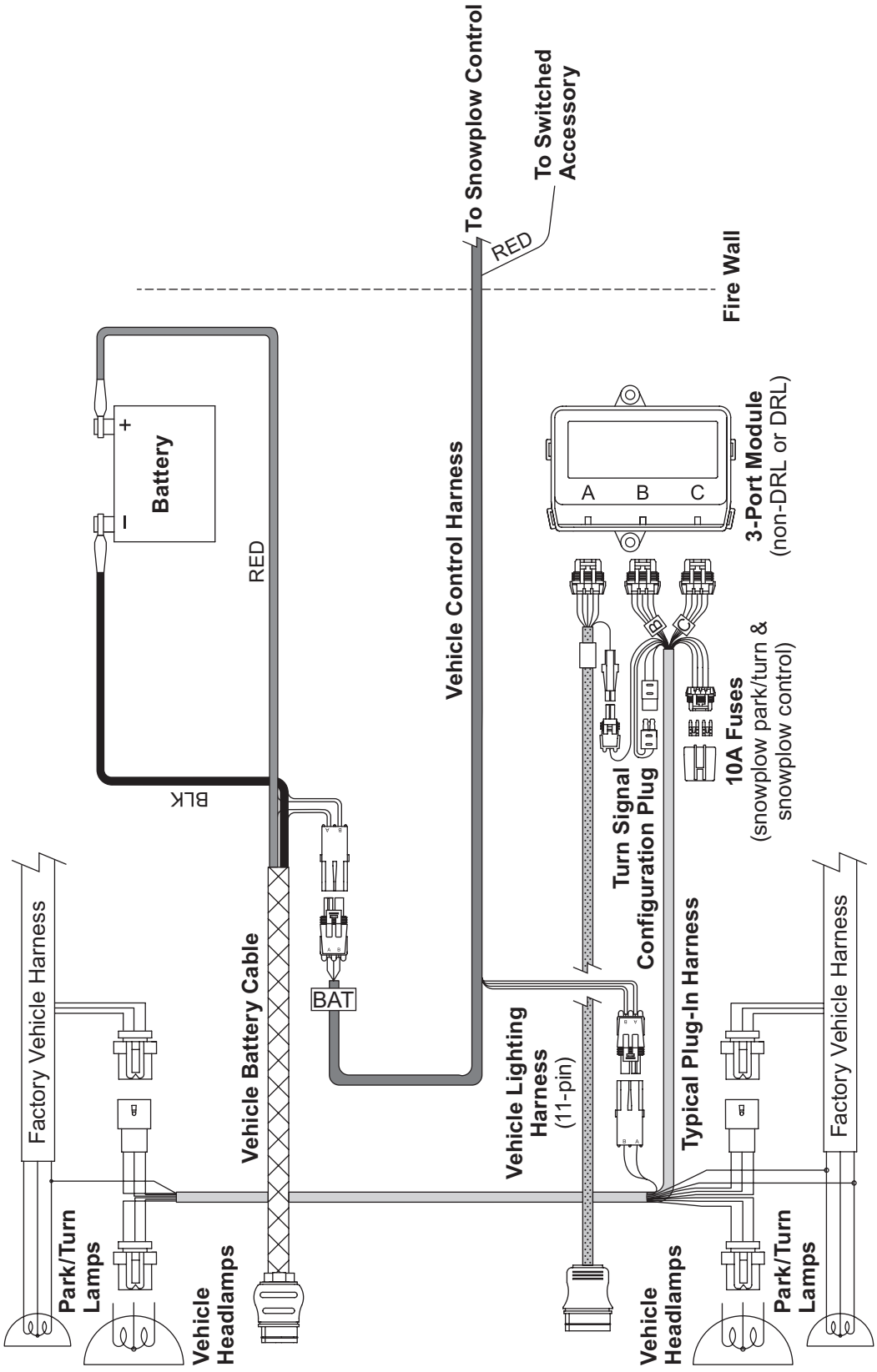

Headlamp Components

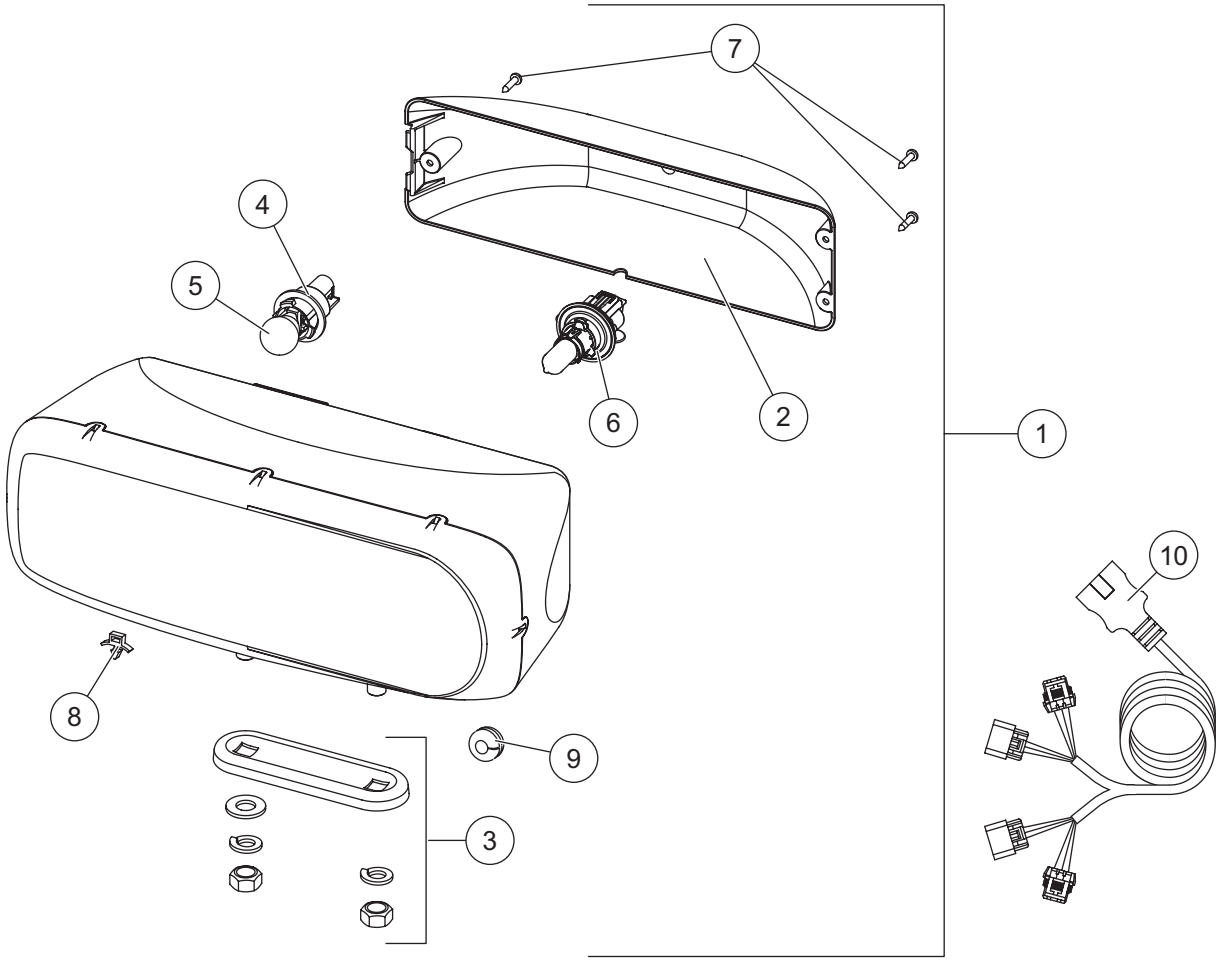

28800-1 Headlamp Kit (pair)							
Item	**Part**	**Qty**	**Description**	**Item**	**Part**	**Qty**	**Description**
1	28802-1	1	Headlamp Service Kit – PS	6	28806	2	Headlamp Bulb Service Kit H13
ns	28801-1	1	Headlamp Service Kit – DS	7	28808-1	2	Cover Screws Service Kit (3 screws)
2	28803-1	2	Rear Cover Kit (fits 2- or 3-screw)	8	56595	6	Cable Anchor Tie
3	28804	2	Mounting Hardware Kit	9	66130	2	Rubber Grommet
4	28805	2	Park/Turn Socket Service Kit	10	28213K	1	Harness Service Kit
5		2	Park/Turn Bulb (trade no. 4157NAK)				
ns = not shown							

TrynEx International, LLC
531 Ajax Drive
Madison Heights, MI 48071-2429
www.snowexproducts.com

A DIVISION OF DOUGLAS DYNAMICS, LLC

Copyright © 2026 Douglas Dynamics, LLC. All rights reserved. This material may not be used, reproduced, or copied in any manner, in whole or in part, in any printed, mechanical, electronic, film, or other distribution and storage media, nor analyzed or manipulated in any manner for the purpose of training artificial intelligence technologies or systems, without the written consent of TrynEx International, LLC. In accordance with Article 4(3) of the Digital Single Market Directive 2019/790, TrynEx International expressly reserves this work from the text and data mining exception. Authorization to photocopy items for internal or personal use by TrynEx International outlets or equipment owner is granted.

TrynEx International reserves the right under its product improvement policy to change construction or design details and furnish equipment when so altered without reference to illustrations or specifications used. TrynEx International or the vehicle manufacturer may require or recommend optional equipment for snow removal. Do not exceed vehicle ratings with a snowplow. TrynEx International offers a limited warranty for all equipment and accessories. See separately printed page for this important information. The following are registered (®) or unregistered (™) trademarks of Douglas Dynamics, LLC: Automatixx®, SECURITY GUARD™, SnowEx®, SPEEDWING™.

Printed in U.S.A.